Proposal No. 2022M-025EN-001

ACORD

CERTIFICATE OF LIABILITY INSURANCE

DATE (MM/DD/YYYY): 08/20/2022

THIS CERTIFICATE IS ISSUED AS A MATTER OF INFORMATION ONLY AND CONFERS NO RIGHTS UPON THE CERTIFICATE HOLDER. THIS CERTIFICATE DOES NOT AFFIRMATIVELY OR NEGATIVELY AMEND, EXTEND OR ALTER THE COVERAGE AFFORDED BY THE POLICIES BELOW. THIS CERTIFICATE OF INSURANCE DOES NOT CONSTITUTE A CONTRACT BETWEEN THE ISSUING INSURER(S), AUTHORIZED REPRESENTATIVE OR PRODUCER, AND THE CERTIFICATE HOLDER.

IMPORTANT: If the certificate holder is an ADDITIONAL INSURED, the policy(ies) must have ADDITIONAL INSURED provisions or be endorsed. If SUBROGATION IS WAIVED, subject to the terms and conditions of the policy, certain policies may require an endorsement. A statement on this certificate does not confer rights to the certificate holder in lieu of such endorsement(s).

PRODUCER	CONTACT NAME: Frannie Sawyer
Rotary Insurance Agency, Inc 11 Music Circle S Nashville TN 37203	PHONE (AC, No, Ext): (615) 865-9200 FAX (AC, No): (615) 865-9207 E-MAIL ADDRESS: fsawyer@rotaryins.com
	INSURER(S) AFFORDING COVERAGE — NAIC #
	INSURER A: Society Insurance — 15201
INSURED Sally Boyz East Nashville LLC 1826 Dalton Ave Nashville TN 37206	INSURER B: INSURER C: INSURER D: INSURER E: INSURER F:

COVERAGES **CERTIFICATE NUMBER:** CL2282326442 **REVISION NUMBER:**

THIS IS TO CERTIFY THAT THE POLICIES OF INSURANCE LISTED BELOW HAVE BEEN ISSUED TO THE INSURED NAMED ABOVE FOR THE POLICY PERIOD INDICATED. NOTWITHSTANDING ANY REQUIREMENT, TERM OR CONDITION OF ANY CONTRACT OR OTHER DOCUMENT WITH RESPECT TO WHICH THIS CERTIFICATE MAY BE ISSUED OR MAY PERTAIN, THE INSURANCE AFFORDED BY THE POLICIES DESCRIBED HEREIN IS SUBJECT TO ALL THE TERMS, EXCLUSIONS AND CONDITIONS OF SUCH POLICIES. LIMITS SHOWN MAY HAVE BEEN REDUCED BY PAID CLAIMS.

INSR LTR	TYPE OF INSURANCE	ADDL INSD	SUBR WVD	POLICY NUMBER	POLICY EFF (MM/DD/YYYY)	POLICY EXP (MM/DD/YYYY)	LIMITS	
A	X COMMERCIAL GENERAL LIABILITY CLAIMS-MADE X OCCUR GEN'L AGGREGATE LIMIT APPLIES PER X POLICY PRO-JECT LOC OTHER:			BP22025546	08/15/2022	08/15/2023	EACH OCCURRENCE $ 1,000,000 DAMAGE TO RENTED PREMISES (Ea occurrence) $ 100,000 MED EXP (Any one person) $ 5,000 PERSONAL & ADV INJURY $ 1,000,000 GENERAL AGGREGATE $ 2,000,000 PRODUCTS - COMP/OP AGG $ 2,000,000 $	
A	AUTOMOBILE LIABILITY ANY AUTO OWNED AUTOS ONLY X HIRED AUTOS ONLY SCHEDULED AUTOS X NON-OWNED AUTOS ONLY			BP22025546	08/15/2022	08/15/2023	COMBINED SINGLE LIMIT (Ea accident) $ 1,000,000 BODILY INJURY (Per person) $ BODILY INJURY (Per accident) $ PROPERTY DAMAGE (Per accident) $ $	
A	X UMBRELLA LIAB X OCCUR EXCESS LIAB CLAIMS-MADE DED X RETENTION $ 0			UM22025500	08/15/2022	08/15/2023	EACH OCCURRENCE $ 1,000,000 AGGREGATE $ 1,000,000 $	
A	WORKERS COMPENSATION AND EMPLOYERS' LIABILITY ANY PROPRIETOR/PARTNER/EXECUTIVE OFFICER/MEMBER EXCLUDED? (Mandatory in NH) Y/N If yes, describe under DESCRIPTION OF OPERATIONS below	N/A		WC22025550	08/15/2022	08/15/2023	X PER STATUTE OTH-ER E.L. EACH ACCIDENT $ 500,000 E.L. DISEASE - EA EMPLOYEE $ 500,000 E.L. DISEASE - POLICY LIMIT $ 500,000	
A	Liquor Liability			HP22025546	08/15/2022	08/15/2023	Each Common Cause Aggregate	$1,000,000 $1,000,000

DESCRIPTION OF OPERATIONS / LOCATIONS / VEHICLES (ACORD 101, Additional Remarks Schedule, may be attached if more space is required)

For Certificate Holder Name: The Metropolitan Government of Nashville and Davidson County, Metro Legal & Claims C/O Insurance and Safety Division 222 3rd Avenue North, Ste #501, Nashville, TN 37201
Certificate Holder is Additional Insured as respects general liability when required by a written contract or agreement. 30 day notice of cancellation (10 day for non-payment) applies in favor of the certificate holder.

CERTIFICATE HOLDER

The Metropolitan Government of Nashville & Davidson Co
222 3rd Avenue North Ste #501
Nashville TN 37201

CANCELLATION

SHOULD ANY OF THE ABOVE DESCRIBED POLICIES BE CANCELLED BEFORE THE EXPIRATION DATE THEREOF, NOTICE WILL BE DELIVERED IN ACCORDANCE WITH THE POLICY PROVISIONS.

AUTHORIZED REPRESENTATIVE

© 1988-2015 ACORD CORPORATION. All rights reserved.

ACORD 25 (2016/03) The ACORD name and logo are registered marks of ACORD

August 15th, 2022

Director of Engineering
Department of Public Works
720 S. Fifth St.
Nashville, TN 37206

Director,

A customer of ours, Edley's BBQ, located at 1000 Woodland Street, Nashville TN 37206 is requesting an aerial encroachment for one (1) proposed double-sided, illuminated projecting sign over the public sidewalk of Woodland St.

A rendering of the sign is on the last page of this packet. Attached please find all of the forms and information required by the Department of Public Works for your review.

If you have any questions, I can be reached at the office 615-255-3463 or by email at austin@joslinsign.com.

Thank you,

Austin Davis
Permit Technician
Joslin and Son Signs
630 Murfreesboro Pike
Nashville, TN 37210
O: 615-255-3463

CERTIFICATE OF INSURANCE

This is to further certify to the Metropolitan Government of Nashville and Davidson County concerning the policies of insurance listed above and the coverage provided thereby that:

1. The Contractual Insurance coverage is on a Blanket Broad Form basis unless specifically indicated below,

2. The company or companies, upon request, agree to deliver within fifteen (15) days a certified copy of any and/or all of the policies of insurance to The Metropolitan Government of Nashville and Davidson County,

3. If one (1) or more Umbrella Excess policies are used, there is no gap between the limits of the primary policies and the deductible feature of the Umbrella Excess policies,

4. Coverage under the primary policies have no deductible features unless there is a check mark here ( ). If there are deductible features or the insured has adopted a funded self-insurance program, they are fully explained on an attached sheet which becomes a part of this Certificate, and

5. The coverage provided shall not be cancelled, reduced in coverage, or allowed to lapse unless and until The Metropolitan Government of Nashville and Davidson County receives at least thirty (30) days advance written notice of same. The written notice must be delivered to the Metropolitan Risk Manager at his office shown as the address of the Certificate Holder below or the secondary Certificate Holder, if one is so listed below.

Name and Address of Certificate Holder

The Metropolitan Government of
Nashville and Davidson County
Metro Legal & Claims
C/O Insurance and Safety Division
222 3rd Avenue North, Ste #501
Nashville, TN 37201

Date Issued: 7/29/2022

Brookside Enterprises
(Agency or Company)

by [signature]
(Authorized Representative)
(Attach Power of Attorney)

ACORD®

CERTIFICATE OF LIABILITY INSURANCE

DATE (MM/DD/YYYY): 11/09/2022

THIS CERTIFICATE IS ISSUED AS A MATTER OF INFORMATION ONLY AND CONFERS NO RIGHTS UPON THE CERTIFICATE HOLDER. THIS CERTIFICATE DOES NOT AFFIRMATIVELY OR NEGATIVELY AMEND, EXTEND OR ALTER THE COVERAGE AFFORDED BY THE POLICIES BELOW. THIS CERTIFICATE OF INSURANCE DOES NOT CONSTITUTE A CONTRACT BETWEEN THE ISSUING INSURER(S), AUTHORIZED REPRESENTATIVE OR PRODUCER, AND THE CERTIFICATE HOLDER.

IMPORTANT: If the certificate holder is an ADDITIONAL INSURED, the policy(ies) must have ADDITIONAL INSURED provisions or be endorsed. If SUBROGATION IS WAIVED, subject to the terms and conditions of the policy, certain policies may require an endorsement. A statement on this certificate does not confer rights to the certificate holder in lieu of such endorsement(s).

PRODUCER

Palmer & Wallace Insurance Brokerage

PO Box 158585
Nashville TN 37215

CONTACT NAME: Jack Wallace
PHONE (A/C, No, Ext): (615) 351-7278 FAX (A/C, No):
E-MAIL ADDRESS: JACKW@PALMERWALLACE.COM

INSURER(S) AFFORDING COVERAGE	NAIC #
INSURER A : The Charter Oak Fire Insurance Company	25615
INSURER B : Travelers Property Casualty Co. of America	25674
INSURER C : Federal Insurance Company	524210
INSURER D :	
INSURER E :	
INSURER F :	

INSURED

Magnolia Woodland LLC
Magnolia Investment Partners, LLC
10 Burton Hills Blvd
Nashville TN 37215

COVERAGES **CERTIFICATE NUMBER:** **REVISION NUMBER:**

THIS IS TO CERTIFY THAT THE POLICIES OF INSURANCE LISTED BELOW HAVE BEEN ISSUED TO THE INSURED NAMED ABOVE FOR THE POLICY PERIOD INDICATED. NOTWITHSTANDING ANY REQUIREMENT, TERM OR CONDITION OF ANY CONTRACT OR OTHER DOCUMENT WITH RESPECT TO WHICH THIS CERTIFICATE MAY BE ISSUED OR MAY PERTAIN, THE INSURANCE AFFORDED BY THE POLICIES DESCRIBED HEREIN IS SUBJECT TO ALL THE TERMS, EXCLUSIONS AND CONDITIONS OF SUCH POLICIES. LIMITS SHOWN MAY HAVE BEEN REDUCED BY PAID CLAIMS.

INSR LTR	TYPE OF INSURANCE	ADDL INSD	SUBR WVD	POLICY NUMBER	POLICY EFF (MM/DD/YYYY)	POLICY EXP (MM/DD/YYYY)	LIMITS	
A	[X] COMMERCIAL GENERAL LIABILITY [ ] CLAIMS-MADE [X] OCCUR [X] Deductible = None GEN'L AGGREGATE LIMIT APPLIES PER: [ ] POLICY [ ] PRO-JECT [X] LOC [ ] OTHER:	X	X	630-7T913517	09/01/2022	09/01/2023	EACH OCCURRENCE DAMAGE TO RENTED PREMISES (Ea occurrence) MED EXP (Any one person) PERSONAL & ADV INJURY GENERAL AGGREGATE PRODUCTS - COMP/OP AGG $	$ 1,000,000 $ 300,000 $ 5,000 $ 1,000,000 $ 2,000,000 $ 2,000,000 $
B	AUTOMOBILE LIABILITY [ ] ANY AUTO [ ] OWNED AUTOS ONLY [ ] SCHEDULED AUTOS [X] HIRED AUTOS ONLY [X] NON-OWNED AUTOS ONLY	X	X	BA-7T917424	09/01/2022	09/01/2023	COMBINED SINGLE LIMIT (Ea accident) BODILY INJURY (Per person) BODILY INJURY (Per accident) PROPERTY DAMAGE (Per accident) $	$ 1,000,000 $ $ $ $
B	[ ] UMBRELLA LIAB [ ] OCCUR [ ] EXCESS LIAB [ ] CLAIMS-MADE [ ] DED [X] RETENTION $ 10,000	X	X	CUP-7T917621	09/01/2022	09/01/2023	EACH OCCURRENCE AGGREGATE $	$ 25,000,000 $ 25,000,000 $
	WORKERS COMPENSATION AND EMPLOYERS' LIABILITY ANY PROPRIETOR/PARTNER/EXECUTIVE OFFICER/MEMBER EXCLUDED? Y / N [ ] (Mandatory in NH) If yes, describe under DESCRIPTION OF OPERATIONS below	N / A					[ ] PER STATUTE [ ] OTH-ER E.L. EACH ACCIDENT E.L. DISEASE - EA EMPLOYEE E.L. DISEASE - POLICY LIMIT	 $ $ $
C	25 x 25 Umbrella Liability	X	X	7819-72-80	09/01/2022	09/01/2023	EACH OCCURRENCE EACH OCCURRENCE	25,000,000 25,000,000

DESCRIPTION OF OPERATIONS / LOCATIONS / VEHICLES (ACORD 101, Additional Remarks Schedule, may be attached if more space is required)

RE: Sign for Edley's East 1000 Woodland Street, Nashville, TN 37206

Magnolia Woodland LLC is included as additional Insured as required by contract.
A 30 day notice of Cancellation applies.

fiThe Metropolitan Government of Nashville & Davidson County, Metro Legal and Claims c/o Insurance and Safety Division is included as additional insured as required by written contract. A 30 day notice of cancellation applies.fl

CERTIFICATE HOLDER

The Metropolitan Government of Nashville and Davidson County

Metro Legal and Claims
222 Third Avenue North, Ste 501
Nashville, TN 37201

CANCELLATION

SHOULD ANY OF THE ABOVE DESCRIBED POLICIES BE CANCELLED BEFORE THE EXPIRATION DATE THEREOF, NOTICE WILL BE DELIVERED IN ACCORDANCE WITH THE POLICY PROVISIONS.

AUTHORIZED REPRESENTATIVE

© 1988-2015 ACORD CORPORATION. All rights reserved.

The ACORD name and logo are registered marks of ACORD

LICENSE AGREEMENT FOR PRIVATE ENCROACHMENTS
INTO THE PUBLIC RIGHT OF WAY

I/We, Magnolia Woodland, LLC, in consideration of the Resolution No. _____, to construct, maintain, install and/or operate an encroachment into, onto, over, or under the public right of way located at in Nashville, Davidson County, Tennessee, do hereby, for myself, my agents, customers, and assigns, waive and release and hold harmless The Metropolitan Government of Nashville and Davidson County, its agents, employees, and assigns from any and all claims, rights, or demands for damages that may arise from my/our use, construction and/or maintenance of the encroachment, to wit: (SEE ATTACHED DESCRIPTION OF ENCROACHMENT). I/We hereby certify to the Metropolitan Government of Nashville and Davidson County that I/We have executed a bond or liability insurance policy in such amount as agreed upon by the Director of Public Works and the Metropolitan Attorney, and in the form approved by the Metropolitan Attorney (per Metropolitan Code Section 38-1-1), which operates to indemnify and save The Metropolitan Government of Nashville and Davidson County harmless from all claims or demands that may result to persons or property by reason of the construction, operations or maintenance of the encroachment. I/We further agree that my/our obligations hereunder may not be assigned except upon approval of the Director of Public Works and the Metropolitan Attorney. I/We further acknowledge that any action that results in a failure to maintain said bond or liability insurance for the protection of The Metropolitan Government of Nashville and Davidson County shall operate to the granting of a lien to The Metropolitan Government of Nashville and Davidson County in the amount of the last effective bond/insurance policy. Said insurance or bond may not be cancelable or expirable except on 30 days notice to the Director of Public Works.

I/We further recognize that the license granted hereby is revocable by The Metropolitan Government upon recommendation of the Director of Public Works and approval by resolution of the Metropolitan County Council if it is determined to be necessary to the public welfare and convenience. In the event the Metropolitan Government revokes this license as contemplated by this paragraph, licensee will not be entitled to any compensation of any kind. This license shall also be strictly subject to the right of way easement owned by The Metropolitan Government. I/We agree to maintain, construct and use the encroachment in such a way as will not interfere with the rights and duties of the Metropolitan Government

as owner of the right of way. Said interference shall be additional grounds for revocation of the license for encroachment. I/We agree to pay the cost of construction, maintenance, use, as well as relocations cost of said encroachment. Licensee's failure to complete construction of the contemplated encroachment within 36 months of the date of approval by the Metropolitan Council will cause this license to terminate automatically. In the event the encroachment contemplated by this license is substantially destroyed, this license shall terminate unless fully restored by licensee within 36 months from the date of such destruction. In the event this license is revoked or terminated for any reason, licensee shall restore all public property to the condition obtaining at the time the license became effective at licensee's sole cost and expense.

DATE: 8.2.22

MAGNOLIA WOODLAND, LLC

(Owner of Property)

1000 WOODLAND ST, NASHVILLE, TN

(Address of Property)

37206

(City and State)

STATE OF TENNESSEE)

COUNTY OF DAVIDSON)

Sworn to and subscribed before

Me this 2nd day of August, 2022

(NOTARY PUBLIC)

My Commission Expires: 1/6/2025.

WARREN SMITH IV
STATE OF TENNESSEE NOTARY PUBLIC
DAVIDSON COUNTY
MY COMMISSION EXPIRES JANUARY 06, 2025

PETITION TO ENCROACH UPON A PUBLIC RIGHT-OF-WAY

PETITION NO. _____

We, the undersigned, do hereby petition the METROPOLITAN DEPARTMENT OF PUBLIC WORKS and the METROPOLITAN PLANNING COMMISSION to recommend to the METROPOLITAN COUNCIL and MAYOR that legislation be enacted to authorize the construction, installation and maintenance of an encroachment upon the public right-of-way as follows:

Double sided corner wrap sign over the public sidewalk of Woodland Street.

Addresses and Map and Parcel numbers of property or properties associated with the proposed encroachment:

ADDRESS	MAP AND PARCEL NUMBER
1000 Woodland St. Nashville	08309DZ1200

Attach the following in support or explanation of this application:

X A check for the filing fee of $250.00 made payable to the Metropolitan Government **(application fee is non-refundable).**

X A scaled drawing on 8 1/2 " x 14" paper of the proposed encroachment. (Additional exhibits may be required depending upon the nature of the request).

X A private encroachment license agreement signed by the person to whom the encroachment privilege is to be granted.

X A certificate of liability insurance in the amount to be determined necessary by the Department of Public Works.

Signature and mailing address of person or business to whom privilege of encroachment will be granted:

Signature: _____ Address: 4230 Murfreesboro Pk.
Nashville, TN 37210

Council District: 4

PERSON FILING THIS PETITION:
If other than owner or optionee of properties listed above, state relationship. All correspondence will be mailed to this person.

Name: Austin Davis - Joslin & Son Signs
Address: 4230 Murfreesboro Pk

City, State, Zip: Nashville, TN 37210

Phone: Residence _____

Business 615-255-3463

NOTE: THIS APPLICATION WILL NOT BE ACCEPTED UNLESS COMPLETED IN FULL.

Metropolitan Government Department of Public Works

750 South 5th Street ∪ Nashville, TN 37206 ∪ (615) 862-8750 ∪ www.nashville.gov/public-works

Mandatory Referral Application:

Encroachment: Sign / Awning / Fiber Optic Cable / Other

**** Before filing this application, please review checklist on the back of this application. ****

Encroachment Type:

π Awning
π Fiber Optic Cable (▲ ground)
π Fiber Optic Cable (▼ ground)
π Sign
π Other_____

Date Submitted: 8- -2022

Mandatory Referral Project No. _____
(MPW staff assigns project #)

Map & Parcel(s): 08309021200
Street Address(es): 1000 WOODLAND ST, Nashville TN 37206

Notarized Signature of Property Owner(s):

You must obtain the *notarized* signature of all property owners on whose property the sign or awning will occur. Failure to provide this information will deem your application ***incomplete*** and postpone your application's consideration by the Metropolitan Planning Commission. Copy form below for additional signatures.

As the owner(s) of property, I/we agree to the submission of this mandatory referral application to the Metropolitan Government Department of Public Works for a sign, awning or fiber optic cable encroachment.

Date: Magnolia Woodland, LLC
(Company Name)

(Signature of Property Owner)
Bart Bowen
(Name of Property Owner)
Auth. Rep.
(Title of Property Owner)
1006 Woodland ST.
NASHVILLE, TN 37206
(Address of Property (including city & state))

STATE OF TENNESSEE
COUNTY OF DAVIDSON
Sworn to and subscribed before
Me this 12th day of August, 2022
(Notary Public)
My Commission Expires: 1-6-25

WARREN SMITH IV
STATE OF TENNESSEE NOTARY PUBLIC
DAVIDSON COUNTY
MY COMMISSION EXPIRES JANUARY 06, 2025

Applicant: All correspondence will be mailed to the applicant.

π Architect π Engineer π Property Owner π Other: Permittech/Municipal Liaison

Name: Austin Davis
Business: Joslin & Son Signs
Address: 630 Murfreesboro Rd.
City: Nashville State: TN Zip: 37210
Phone: 615-255-3463 ☐ business ☐ home 931-446-3408 ☐ business ☒ mobile
Fax: ☐ business ☐ home ☐ business ☐ mobile
E-mail: austin@joslinsign.com
Applicant's Signature:

Filing Fee **(All application fees are non-refundable)**

Encroachment: Sign / Awning / Fiber Optic Cable $250.00
Other

Amount paid: $_____

Accepted by: _____ **Date:** _____

SITE PLAN

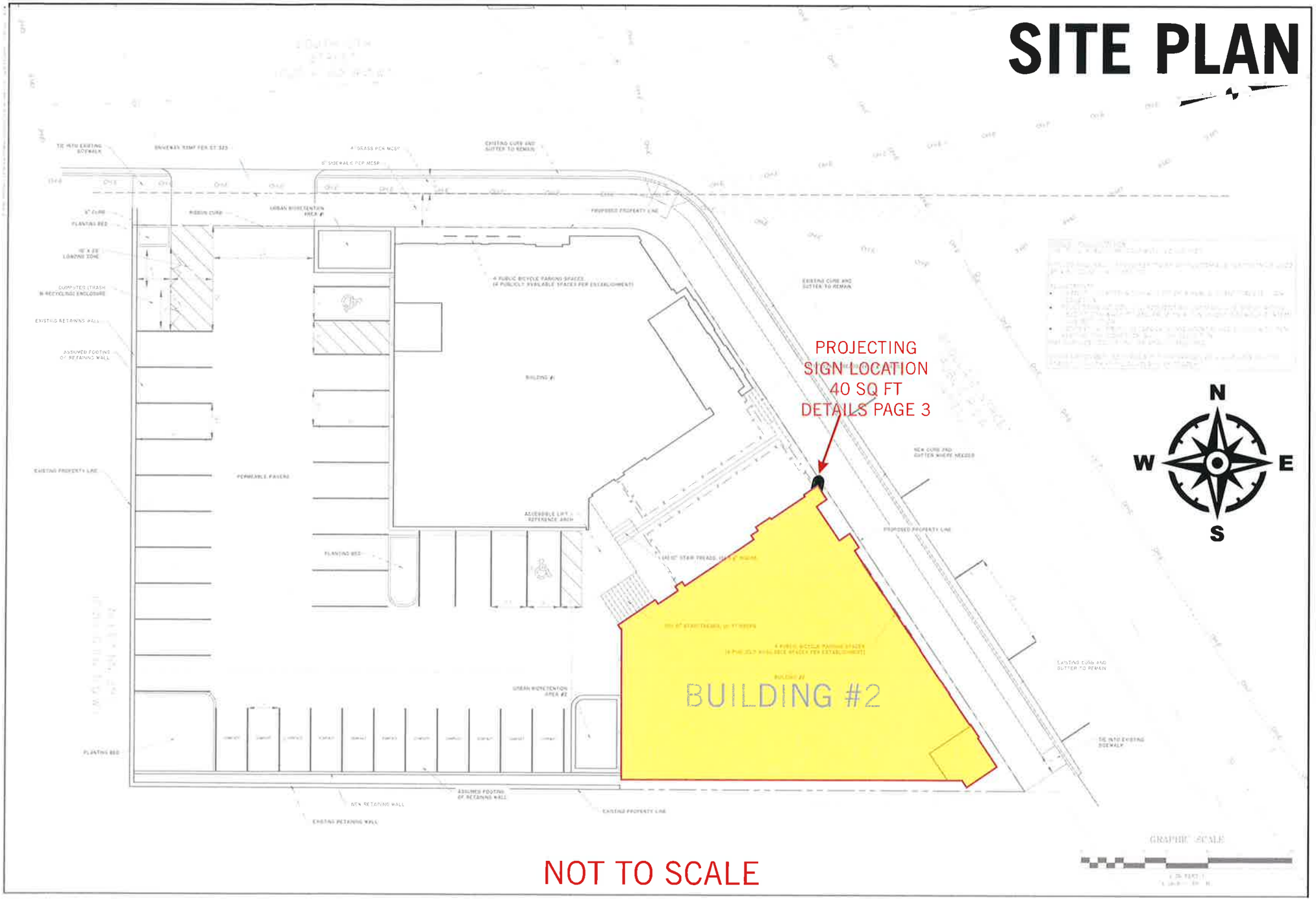

NOT TO SCALE

JOSLIN AND SON SIGNS
CUSTOM SINCE 1977

630 MURFREESBORO PIKE
NASHVILLE, TN 37210

615_255_3463
615_255_3518 FAX

JOSLINSIGN.COM

EDLEY'S

1000 WOODLAND ST
NASHVILLE, TN 37206

DRW#_	220406-K70
QUOTE#_	104792
WK_ORD#_	391546
DESIGNER_	J.MORTON
PROJ_MGR_	K.CLARK
DATE_	08.04.22

COLORS & FINISHES:

CUSTOMER SIGNATURE

COPYRIGHT © 2022

WOODLAND STREET ELEVATION

40 SQ FT

PROJECTION HEIGHT TBD
18" SHOWN

RENDERING SCALE NOT EXACT

JOSLIN AND SON SIGNS
CUSTOM SINCE 1977

630 MURFREESBORO PIKE
NASHVILLE, TN 37210

615_255_3463
615_255_3518 FAX

JOSLINSIGN.COM

EDLEY'S

1000 WOODLAND ST
NASHVILLE, TN 37206

DRW#_	220406-K70
QUOTE#_	104792
WK_ORD#_	391546
DESIGNER_	J.MORTON
PROJ_MGR_	K.CLARK
DATE_	08.04.22

COLORS & FINISHES:

CUSTOMER SIGNATURE

COPYRIGHT © 2022

CORNER-MOUNTED NEON BLADE SIGN

SCALE: 1/2"=1'0"

40 SQ FT
(VISUAL SPACE)

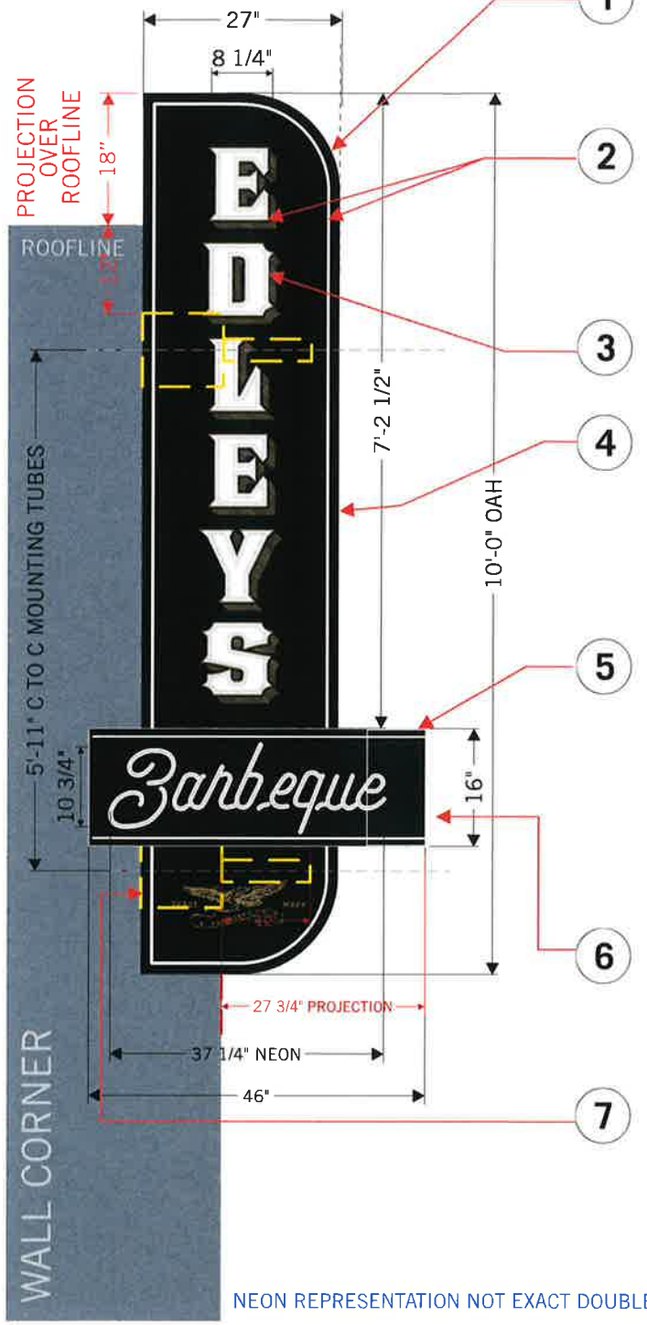

1. 27" DEEP X 22" WIDE D/F FORMED ALUMINUM CABINET TO WRAP CORNER. CABINET TO HAVE FRONT RADIUS TOP AND BOTTOM. CABINET PAINTED BLACK.
2. 'EDLEYS' COPY TO PAINTED WHITE W/ DROP SHADOW DETAIL TO BE CUT GOLD METALLIC CUT VINYL (3630-131) 1/2" WIDE CUT WHITE VINYL BORDER INSET FROM EDGE 1 1/2".
3. 15MM 6500K WHITE NEON COPY 'EDLEYS'.
4. CABINET EDGE COPY 'EAST' TO BE ROUTED ALUMINUM BACKED W/ WHITE ACRYLIC AND INTERNALLY LIT W/ WHITE LED'S., SIDE PANEL TO BE REMOVABLE FOR SERVICE AND MOUNTING.
5. 36" DEEP X 16" TALL FORMED ALUMINUM CABINET TO WRAP MAIN CABINET WITH FRONT RADIUS. PAINTED STANDARD BLACK AND WHITE PAINTED COPY "BARBEQUE" WITH 10MM 6500K WHITE NEON COPY 'BARBEQUE' AND BORDER.
6. PAINTED WHITE CIRCLE DECORATED WITH REVERSE CUT GOLD METALLIC (3630-131) VINYL 8MM 6500K WHITE NEON 'STAR' & 'CIRCLE'
7. 1/2" THICK MOUNTING PLATES WITH 3" SQUARE SUPPORT TUBES W/ 12" TOTAL PROJECTION. PLATES AND POLES TO BE PRESET WITH CHEMICAL ANCHOR MOUNTING.

NEON REPRESENTATION NOT EXACT DOUBLE-BACKS AND WIRES NOT SHOWN

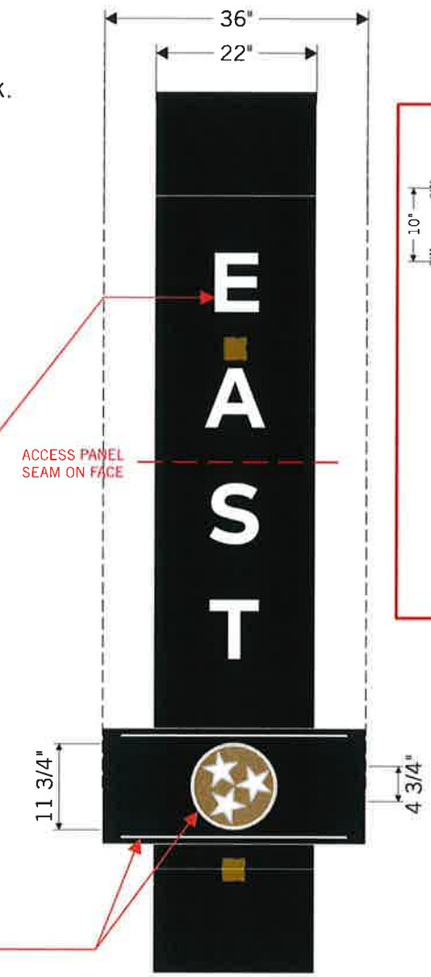

END VIEW

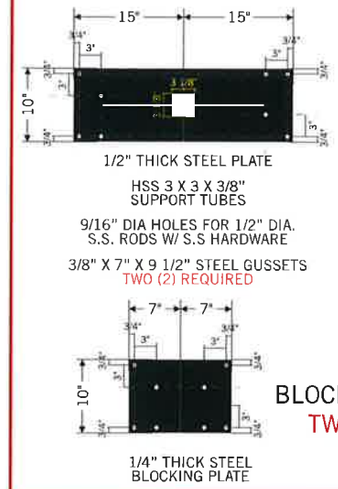

MOUNTING PLATE DETAIL
TWO (2) REQUIRED

SED PAGE 4

BLOCKING PLATE DETAIL
TWO (2) REQUIRED

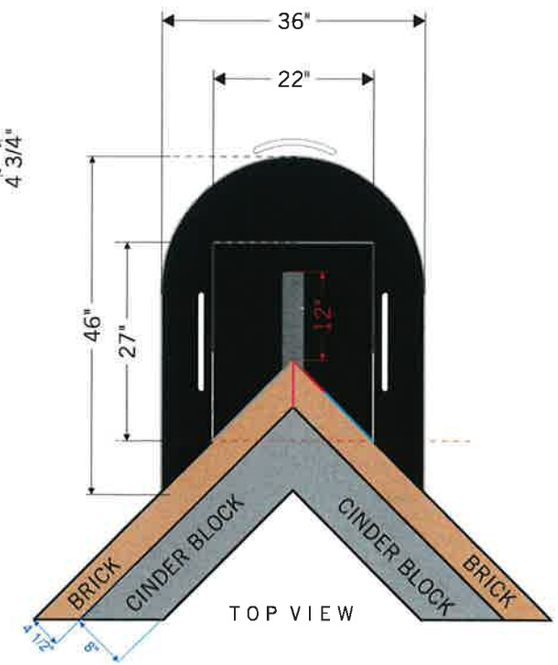

TOP VIEW

JOSLIN AND SON SIGNS
CUSTOM SINCE 1977

630 MURFREESBORO PIKE
NASHVILLE, TN 37210

615_255_3463
615_255_3518 FAX

JOSLINSIGN.COM

EDLEY'S

1000 WOODLAND ST
NASHVILLE, TN 37206

DRW#_	220406-K70
QUOTE#_	104792
WK_ORD#_	391546
DESIGNER_	J.MORTON
PROJ_MGR_	K.CLARK
DATE_	08.04.22

COLORS & FINISHES:

- STANDARD BLACK
- WHITE ACRYLIC / WHITE VINYL / WHITE LED
- GOLD METALLIC 3630-131 (PMS 872 C)
- 8MM/10MM/15MM 6500K WHITE NEON

CUSTOMER SIGNATURE

COPYRIGHT © 2022

PROJECT#
1122007R

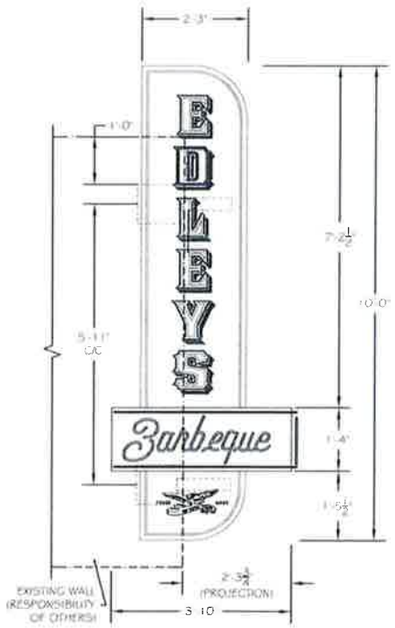

SIDE VIEW

END VIEW

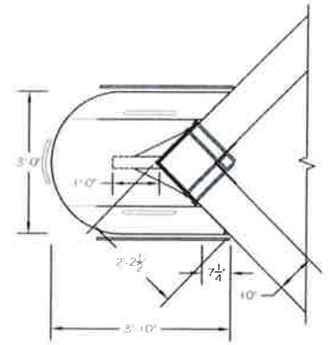

PLAN VIEW

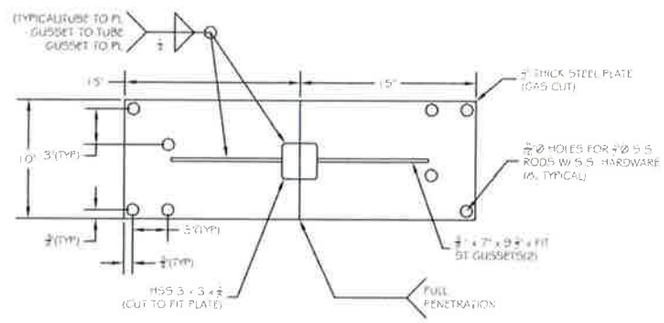

WALL MOUNT PLATE DETAIL
(PLATE SHOWN FLAT, IN T.S REFERENCE TOP VIEW)(TYPICAL, 2 REQUIRED)
(INSTALL 1 MATCHING WASHER PLATE TO FIT(7" x 7" x 1/4" TALL x 3/4" THICK)
BEHIND WALL PER MOUNT FOR A TOTAL OF 2 BLOCKING PLATES

NOTES

1. THE DESIGN, FABRICATION AND CONSTRUCTION SHALL CONFORM TO THE FOLLOWING CODES AND SPECIFICATIONS: THE 2018 INTERNATIONAL BUILDING CODE. THE AMERICAN INSTITUTE OF STEEL CONSTRUCTION(MANUAL OF STEEL CONSTRUCTION, 9TH EDITION). THE AMERICAN WELDING SOCIETY(AWS D1.1-20). THE AMERICAN CONCRETE INSTITUTE BUILDING CODE REQUIREMENTS FOR STRUCTURAL CONCRETE(ACI 318-14). THE SPECIFICATIONS FOR ALUMINUM STRUCTURES BY THE ALUMINUM ASSOCIATION(CURRENT EDITION).
2. STRUCTURAL STEEL REQUIREMENTS: PLATES, ROLLED SHAPES AND BARS SHALL BE ASTM A36(OR EQUAL). STANDARD PIPE SHALL BE ASTM A53, GRADE B(OR BETTER, FY=35 KSI). STRUCTURAL TUBING SHALL BE ASTM A500, GRADE B(OR BETTER, FY= 46 KSI). ALL BOLTED CONNECTIONS SHALL BE MADE WITH ASTM A325 BOLTS(OR BETTER WITH FLAT WASHERS(UNLESS NOTED OTHERWISE). ALL FASTENERS TO BE NON-CORROSIVE. ALL STRUCTURAL STEEL SHALL BE SHOP PRIME COATED WITH A RUST INHIBITIVE PRIMER AND FINISH PAINTED AS APPROVED BY OWNER(SURFACE PREPARATION SHALL BE IN ACCORDANCE WITH THE MANUFACTURERS' RECOMMENDATIONS). FIELD CONNECTIONS AND DAMAGED OR ABRADED AREAS OF PROTECTIVE COATING SHALL BE TOUCH UP PAINTED WITH COMPATIBLE MATERIAL. ALL STEEL SUBJECT TO DIRECT CONTACT WITH EARTH SHALL BE BITUMASTIC(OR EQUAL) COATED(IF NOT SUBJECT TO SUNLIGHT AND CARBOMASTIC(OR EQUAL) COATED(IF SUBJECT TO SUNLIGHT) IN ACCORDANCE WITH THE MANUFACTURER'S RECOMMENDATIONS. ALL WELDS SHALL BE MADE WITH E70XX ELECTRODES(OR EQUAL). ALL FIELD WELDS SHALL COMPLY WITH AWS CODE FOR PROCEDURES, APPEARANCE, AND QUALITY OF WELDS. ALL WELDERS AND WELDING PROCESSES SHALL BE QUALIFIED IN ACCORDANCE WITH AWS STANDARD QUALIFICATION PROCEDURES.
3. ALL FERROUS TO NONFERROUS SURFACES SHALL BE SEPARATED BY 3M#355 POLYESTER CLEAR TAPE(OR EQUAL).
4. THE ELECTRICAL INSTALLATION SHALL BE IN COMPLIANCE WITH THE NATIONAL ELECTRICAL CODE AND ALL REQUIREMENTS OF THE LOCAL GOVERNING AUTHORITY.
5. THE DESIGN WIND SPEED IS 115 MPH PER ASCE 7-16 WITH "C" EXPOSURE RESULTING IN A DESIGN PRESSURE OF 26.61 PSF AT A HEIGHT OF 30'-0" ABOVE GRADE.
6. THE CUSTOMER'S BUILDING ENGINEER IS TO DETERMINE IF THE BUILDING STRUCTURE WILL SUPPORT THE SIGN. THE CUSTOMER SHALL SUPPLY ANY ADDITIONAL STRUCTURE REQUIRED.
7. THE CONTRACTOR SHALL VERIFY ALL DIMENSIONS AND CONDITIONS IN THE FIELD AND NOTIFY THE ENGINEER OF ANY DISCREPANCIES.
8. ENGINEERING SEAL IS APPLICABLE TO THE WALL ATTACHMENT DESIGN ONLY.
9. SIGNAGE IS UL LISTED. SIGNAGE IS MANUFACTURED IN COMPLIANCE NEC 600. SIGNAGE IS GROUNDED IN COMPLIANCE WITH NEC 250. ONE VISIBLE 20 AMP DISCONNECT IS REQUIRED PER CIRCUIT.
10. MAXIMUM UNIT HEIGHT IS 30'-0" ABOVE GRADE.

This design is the property of designFirst, Inc. Any derivative works or copies, in whole or part, is prohibited without the written authorization of designFirst, Inc.

Glenn T. Tisdale, P.E.

08-04-22
License No. 00106270

JOSLIN AND SON SIGNS
630 MURFREESBORO ROAD
NASHVILLE, TN 37210

BLADE SIGN
EDLEY'S- 1000 WOODLAND STREET- NASHVILLE, TN

designFirst, Inc.
P.O. BOX 9335
DOTHAN, AL 36304
(334)793-9734

CAD: GT
SCALE: 3/8"= 1'
DATE: 08/04/22
SHT. NO.: 1 OF 1
DWG. NO.: 1122007RS1

JOSLIN AND SON SIGNS
CUSTOM SINCE 1977
630 MURFREESBORO PIKE
NASHVILLE, TN 37210
615_255_3463
615_255_3518 FAX
JOSLINSIGN.COM

EDLEY'S

1000 WOODLAND ST
NASHVILLE, TN 37206

DRW#_ 220406-K70
QUOTE#_ 104792
WK_ORD#_ 391546
DESIGNER_ J.MORTON
PROJ_MGR_ K.CLARK
DATE_ 08.04.22

COLORS & FINISHES:

CUSTOMER SIGNATURE

COPYRIGHT © 2022

SHEET 4 OF 4